Rocket Door Frames

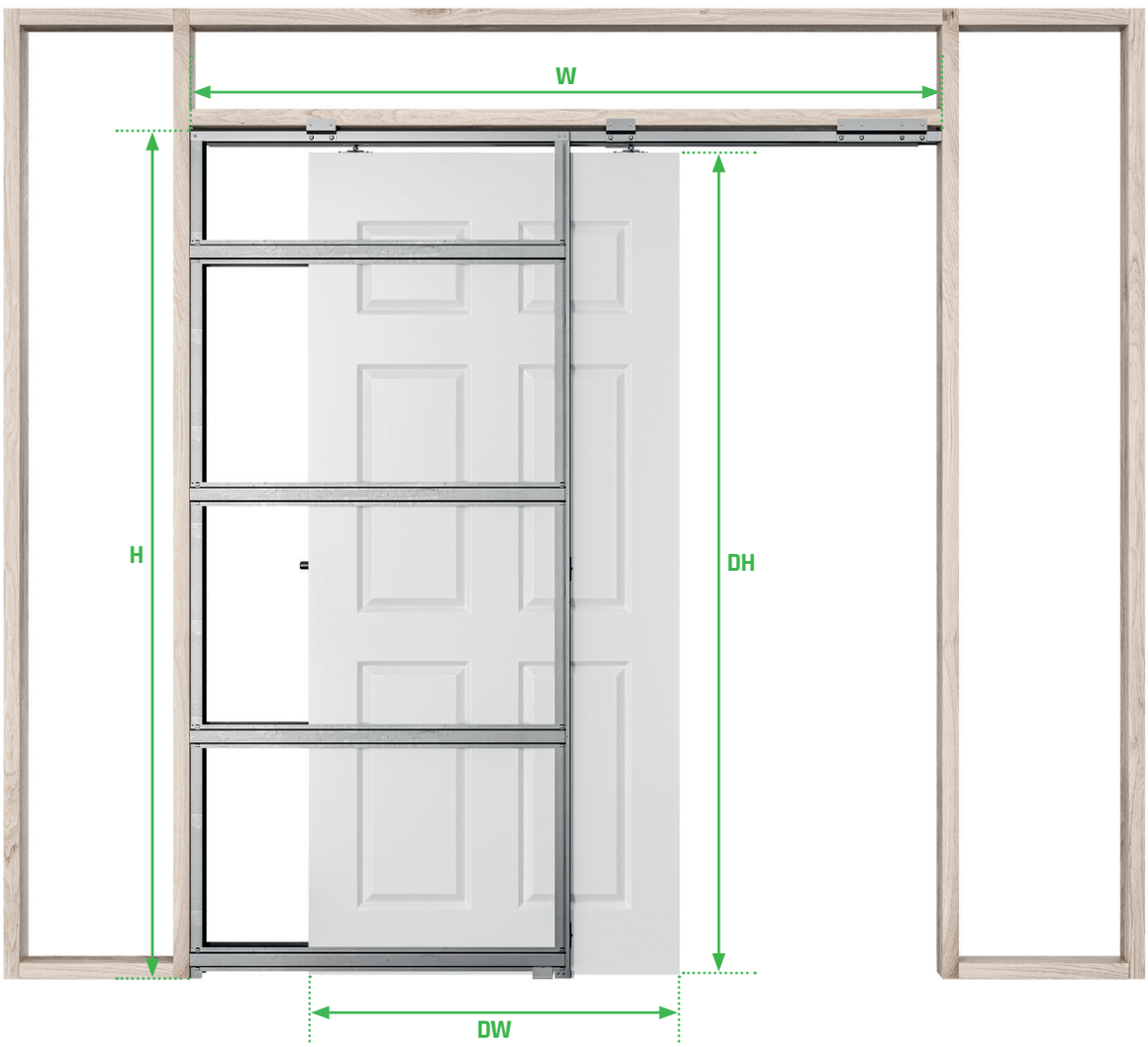

DOOR PANEL		FRAME WIDTH	OVERALL DIMENSIONS			
			SINGLE DOOR		DOUBLE DOOR	
DW	DH		W	H	W	H
610	1981	90	1233	2053	2466	2053
686	1981		1385	2053	2770	2053
762	1981		1537	2053	3074	2053
838	1981		1689	2053	3378	2053
914	1981		1841	2053	3682	2053
626	2040		1264	2112	2528	2112
726	2040		1464	2112	2928	2112
826	2040		1664	2112	3328	2112
926	2040		1864	2112	3728	2112
1026	2040		2064	2112	4128	2112
711	1981		1434	2053	2868	2053
813	2032		1638	2104	3276	2104
864	2032		1740	2104	3480	2104
Door Thickness: 35 - 44 mm						

- Install at finished floor level.
- To obtain a sliding pocket door with two leafs it's necessary to join n°2 single door kits.
- See page 4 for stud dimensions

CAUTION

Please follow the instructions carefully as they have been designed to help you, don't skip any pages or stages as you may cause yourself problems. Use the correct tools and relevant protective clothing/eyeware, gloves are essential as there may be some sharp edges. A pair of trestles would be useful for the assembly.

WANT TO SEE HOW IT'S DONE?

GO TO WWW.ROCKETDOORFRAMES.CO.UK TO SEE THE INSTALLATION VIDEO

TOOLS REQUIRED

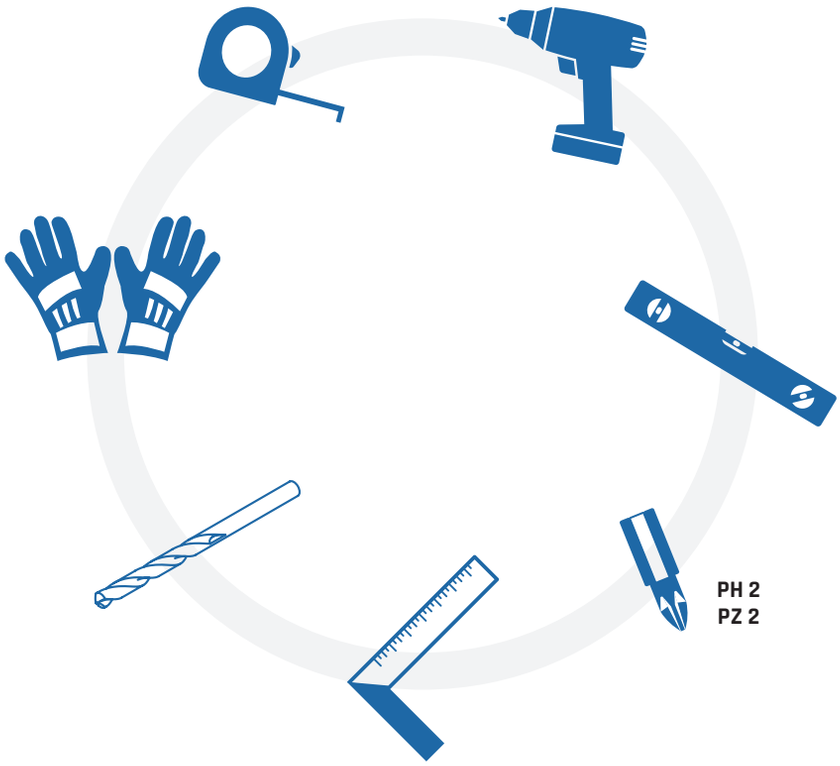

CONTENTS

EACH KIT CONTAINS:

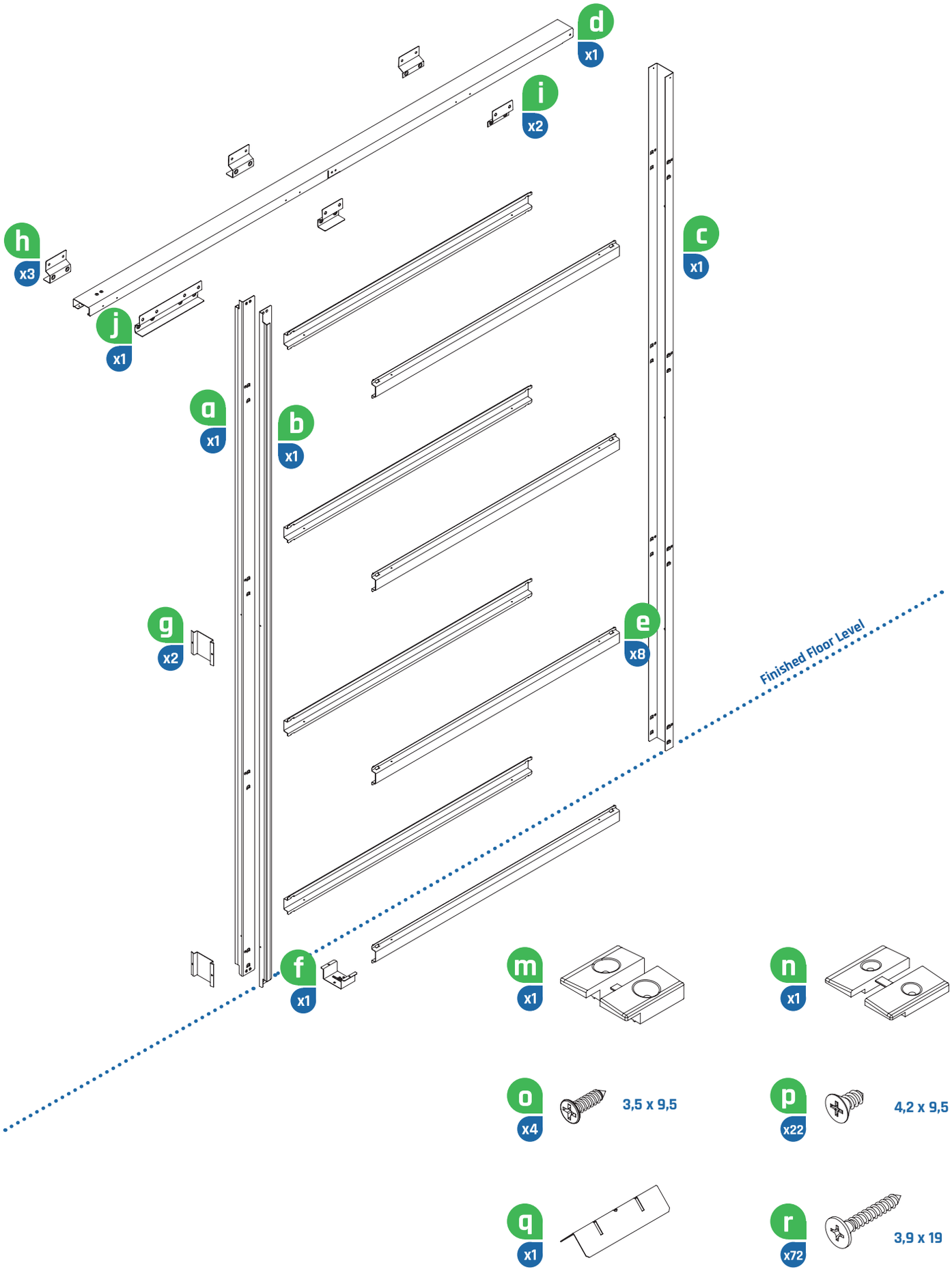

CONTENTS

EACH KIT CONTAINS:

aa x2 — M8

bb x2 — M8 x 40 mm

cc x2 — M8

dd x2 — 3,5 x 9,5 mm

ee x8 — 3,5 x 25 mm

ff x1

gg x1 — 4 x 50 mm

hh x1

ii x2

ll x2

mm x2

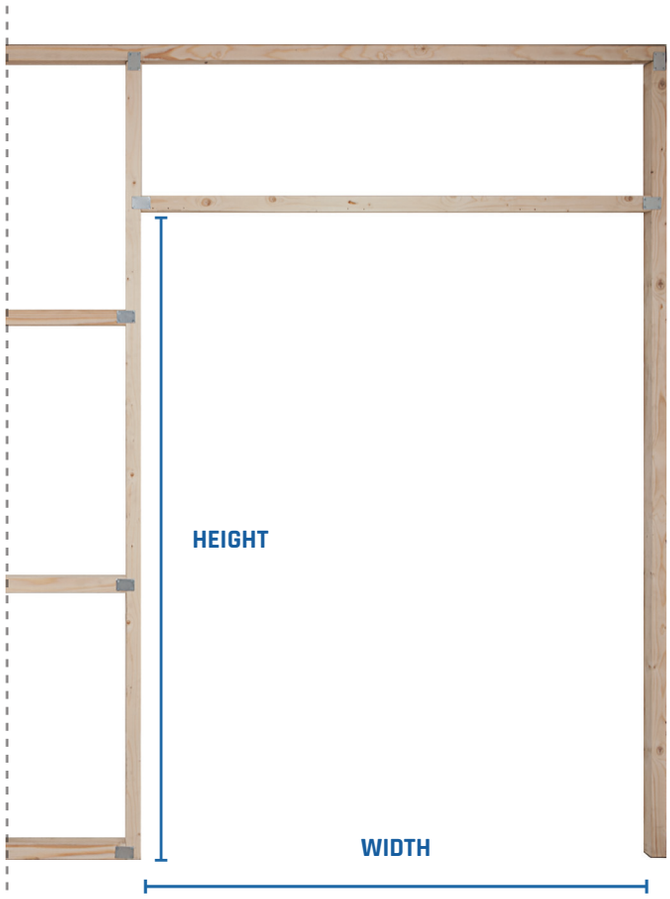

The Rocket Pocket kit will adapt to almost any stud dimension HOWEVER, the stud immediately above the frame must be 90 mm. You can add layers of plasterboard to this to then obtain the wall thickness you require. Bare in mind the jamb dimensions will change accordingly.

DOOR PANEL		OVERALL DIMENSIONS			
		SINGLE DOOR		DOUBLE DOOR	
DW	DH	W	H	W	H
610	1981	1233	2053	2466	2053
686	1981	1385	2053	2770	2053
762	1981	1537	2053	3074	2053
838	1981	1689	2053	3378	2053
914	1981	1841	2053	3682	2053
626	2040	1264	2112	2528	2112
726	2040	1464	2112	2928	2112
826	2040	1664	2112	3328	2112
926	2040	1864	2112	3728	2112
1026	2040	2064	2112	4128	2112
711	1981	1434	2053	2868	2053
813	2032	1638	2104	3276	2104
864	2032	1740	2104	3480	2104
Door Thickness: 35 - 44 mm					

CHOOSING THE DOOR GUIDE

FOR WOODEN DOORS ONLY

DOOR THICKNESS

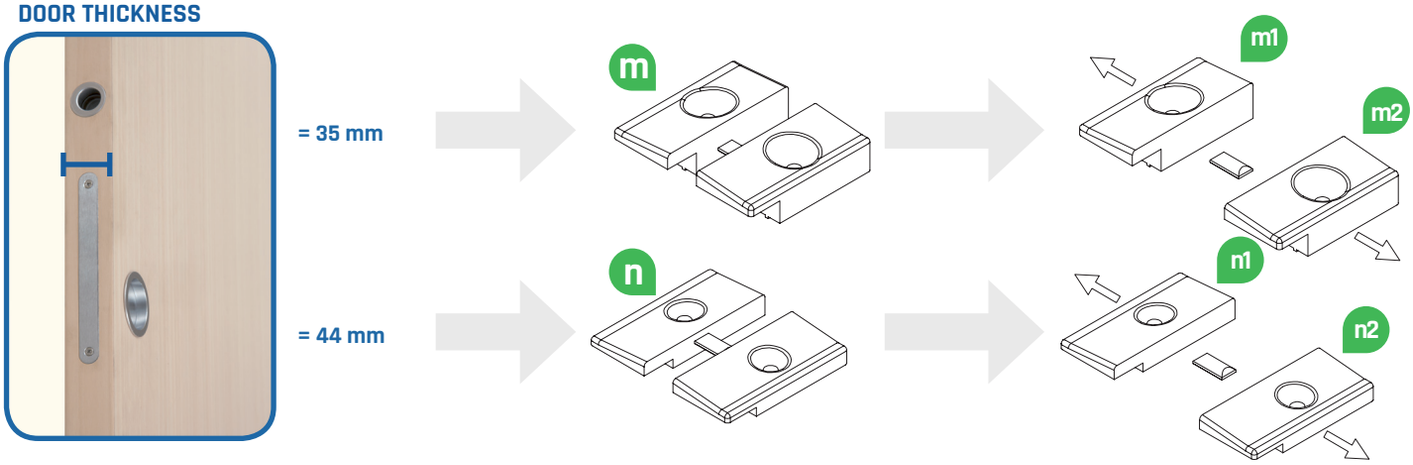

FOR EXAMPLE 35 mm THICK DOOR

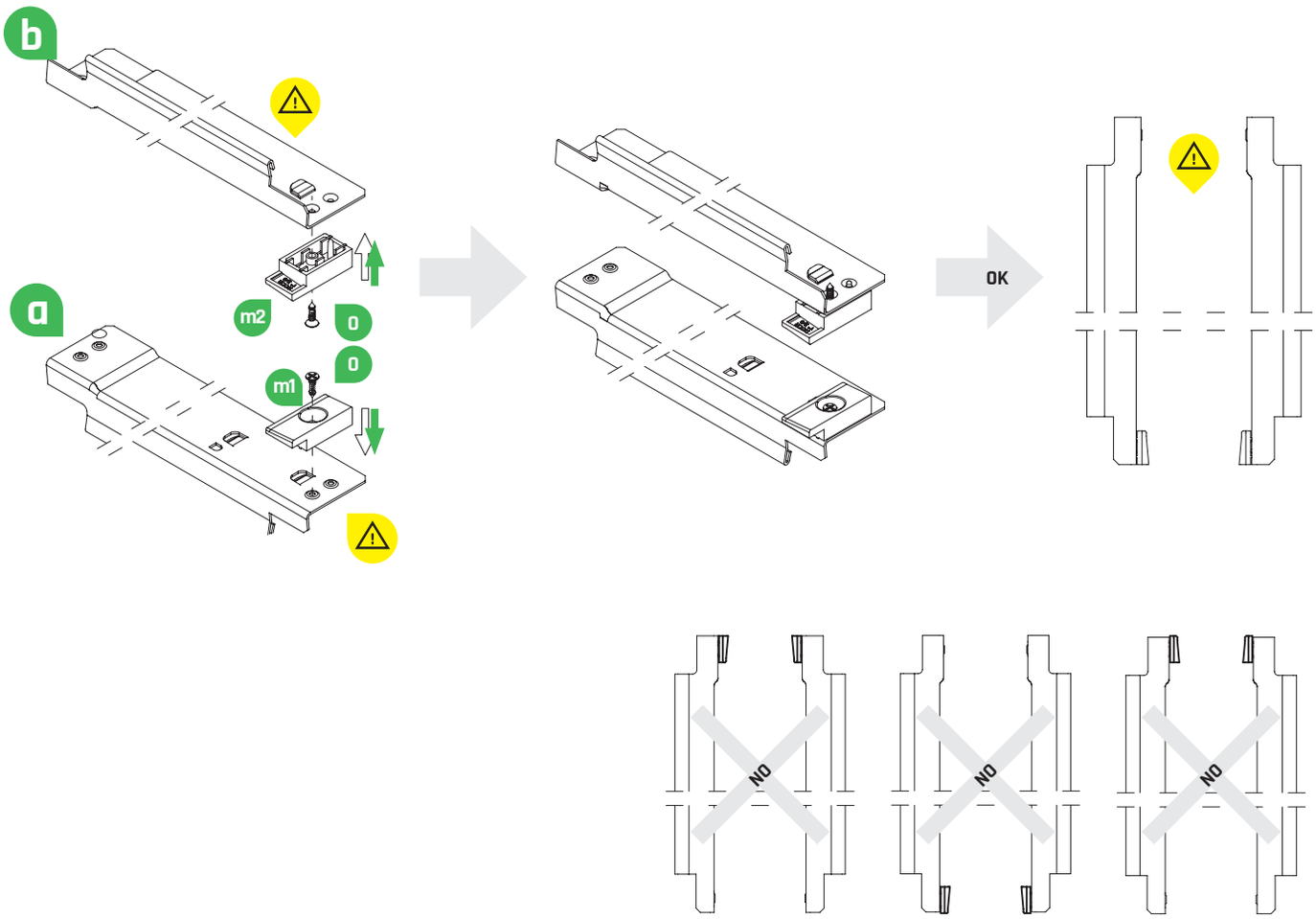

ATTACHING THE BRACKETS

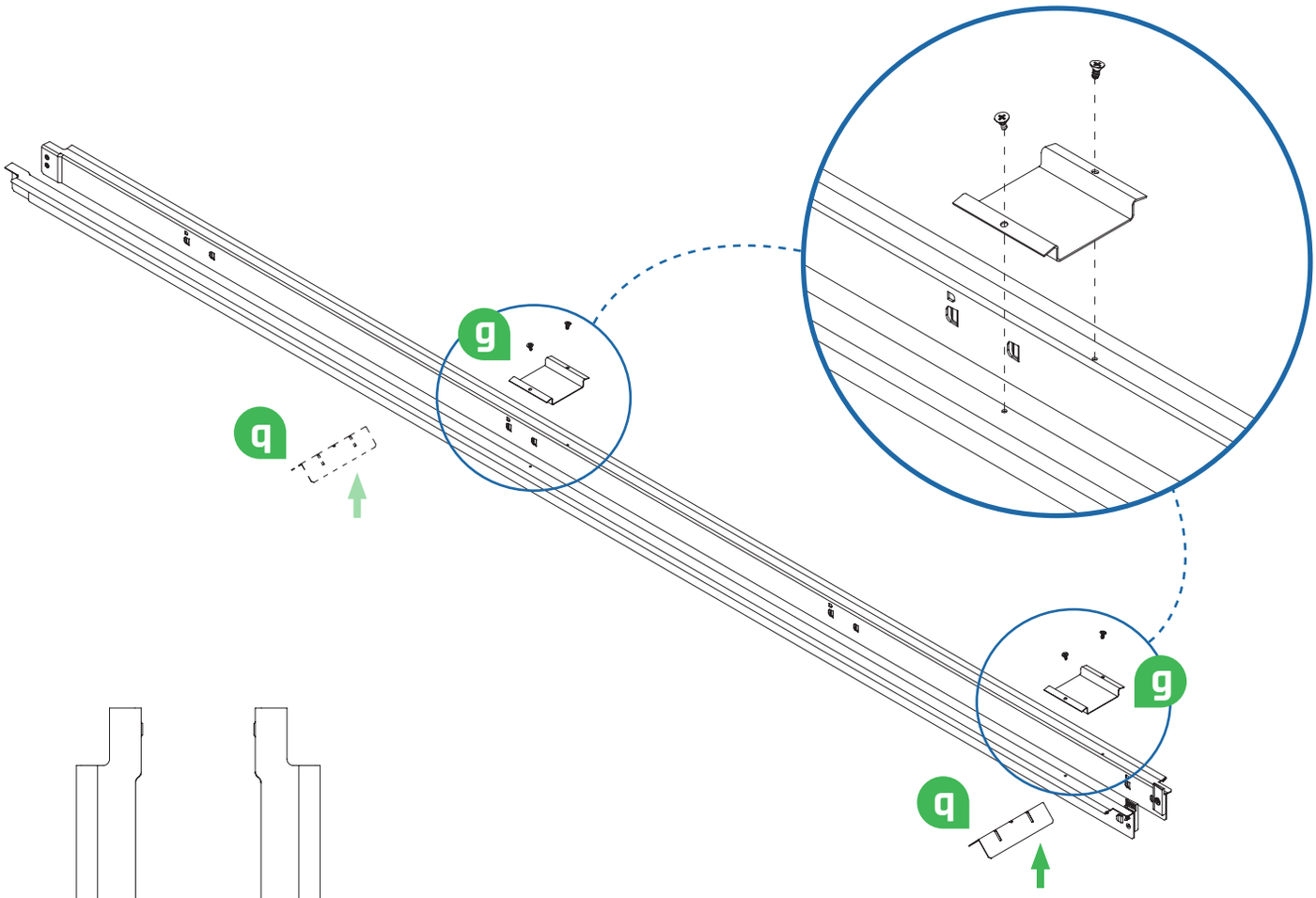

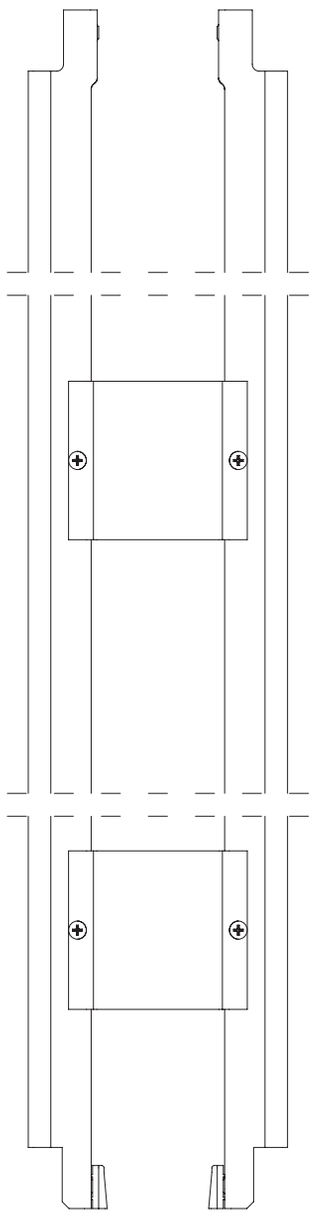

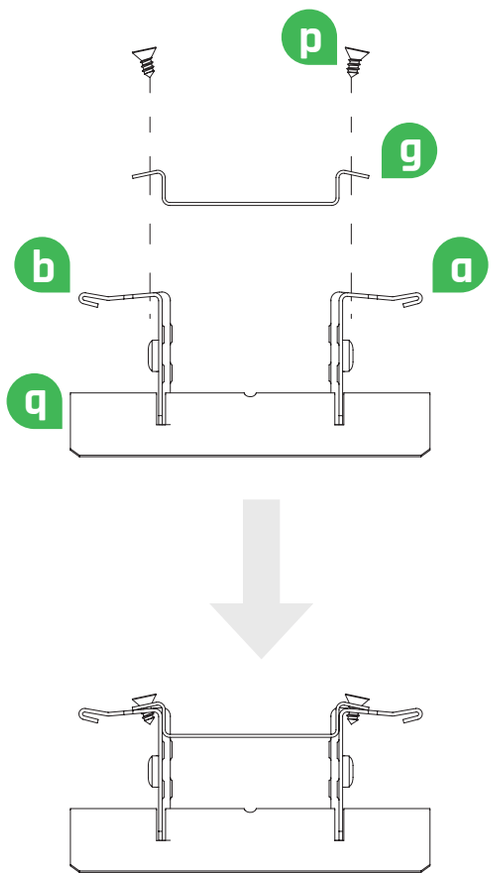

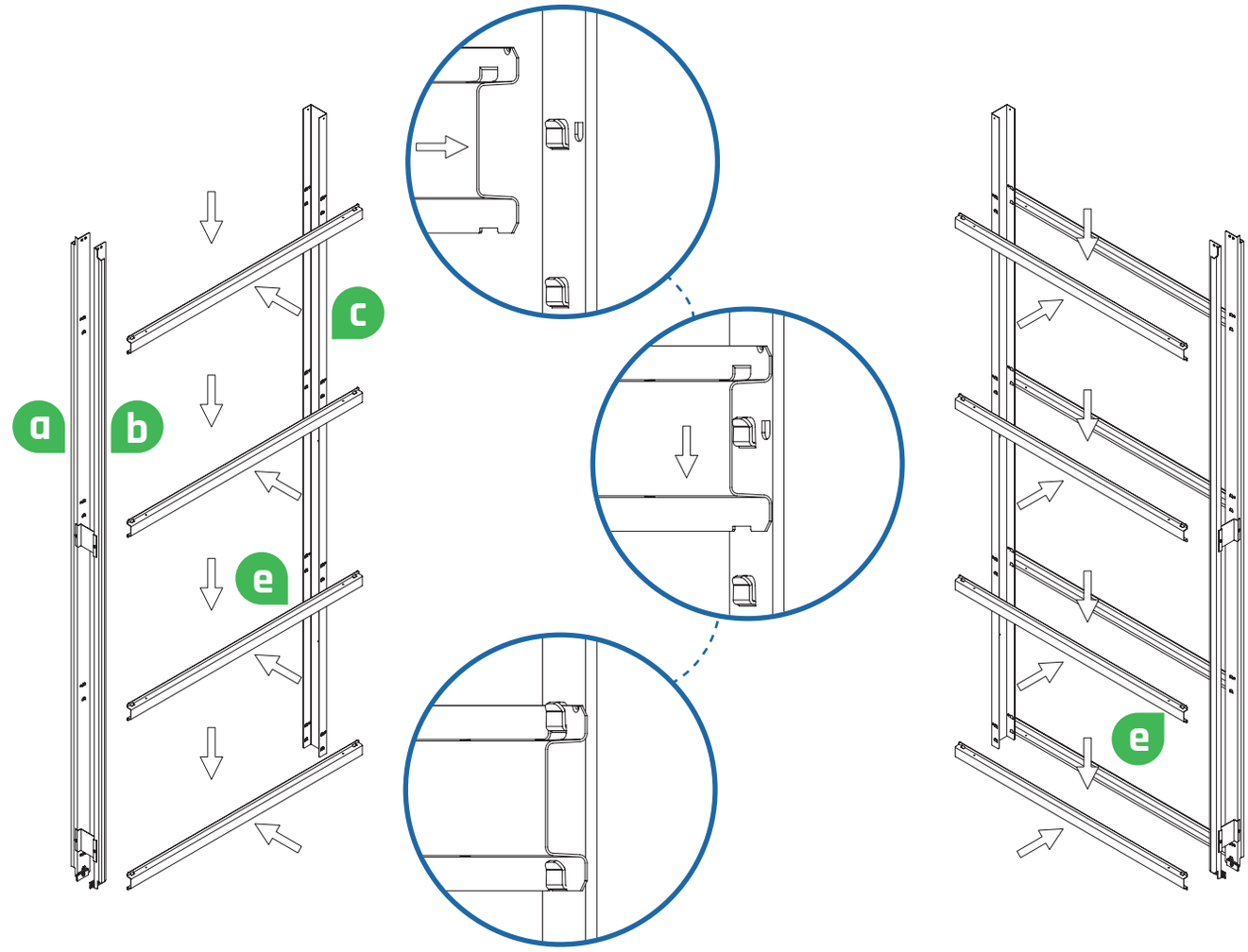

FRAME ASSEMBLING

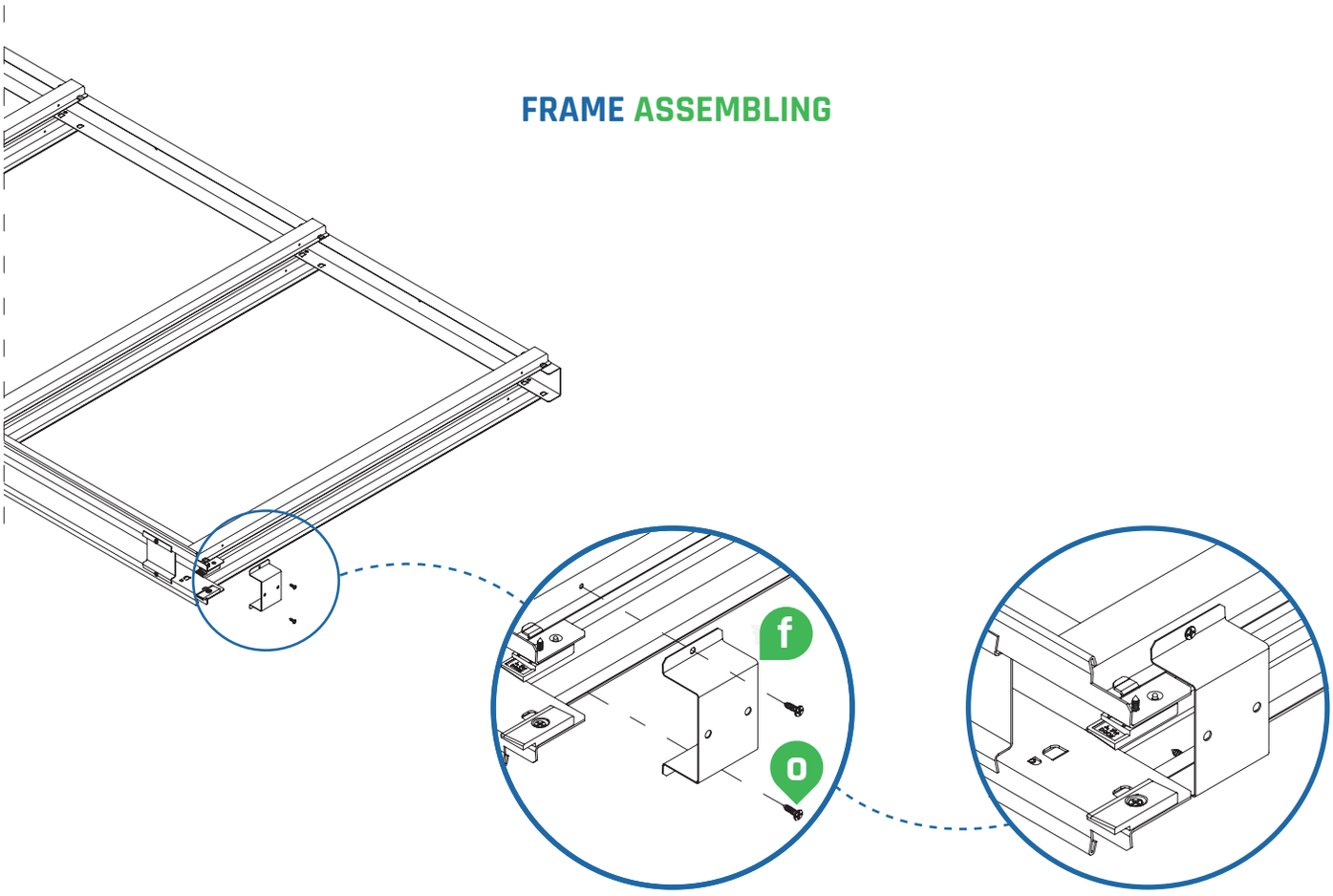

ATTACHING THE BRACKETS

Assemble top brackets h and j on one side only for the moment. Note the brackets are different so position correctly

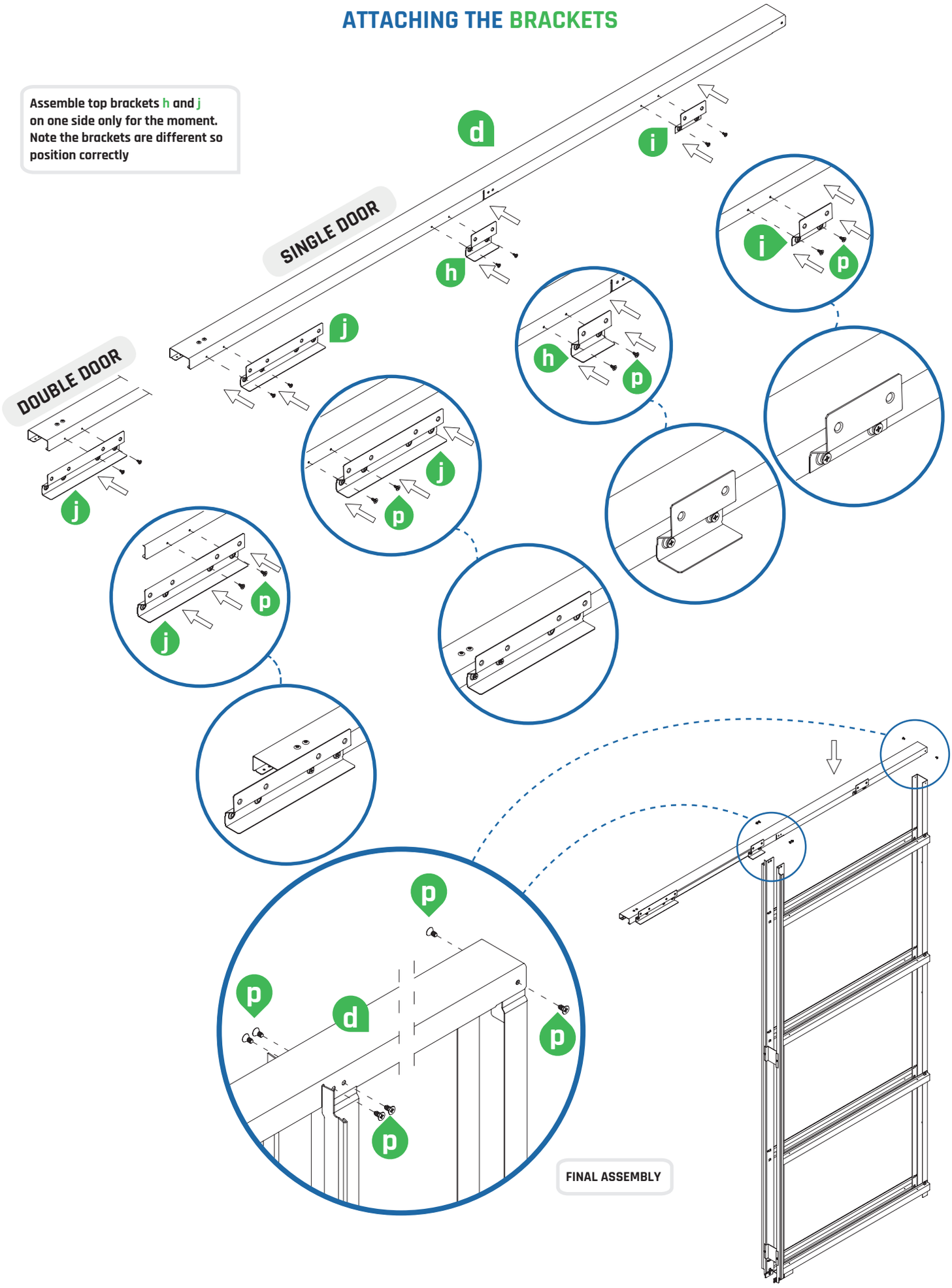

SINGLE DOOR

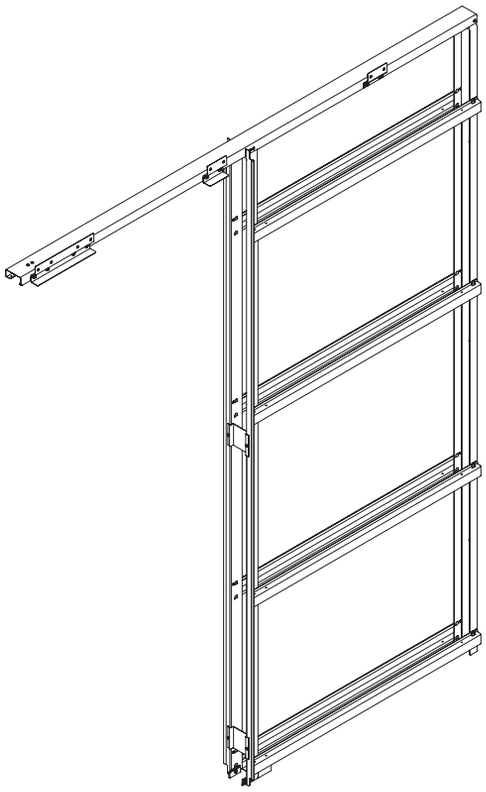

DOUBLE DOOR

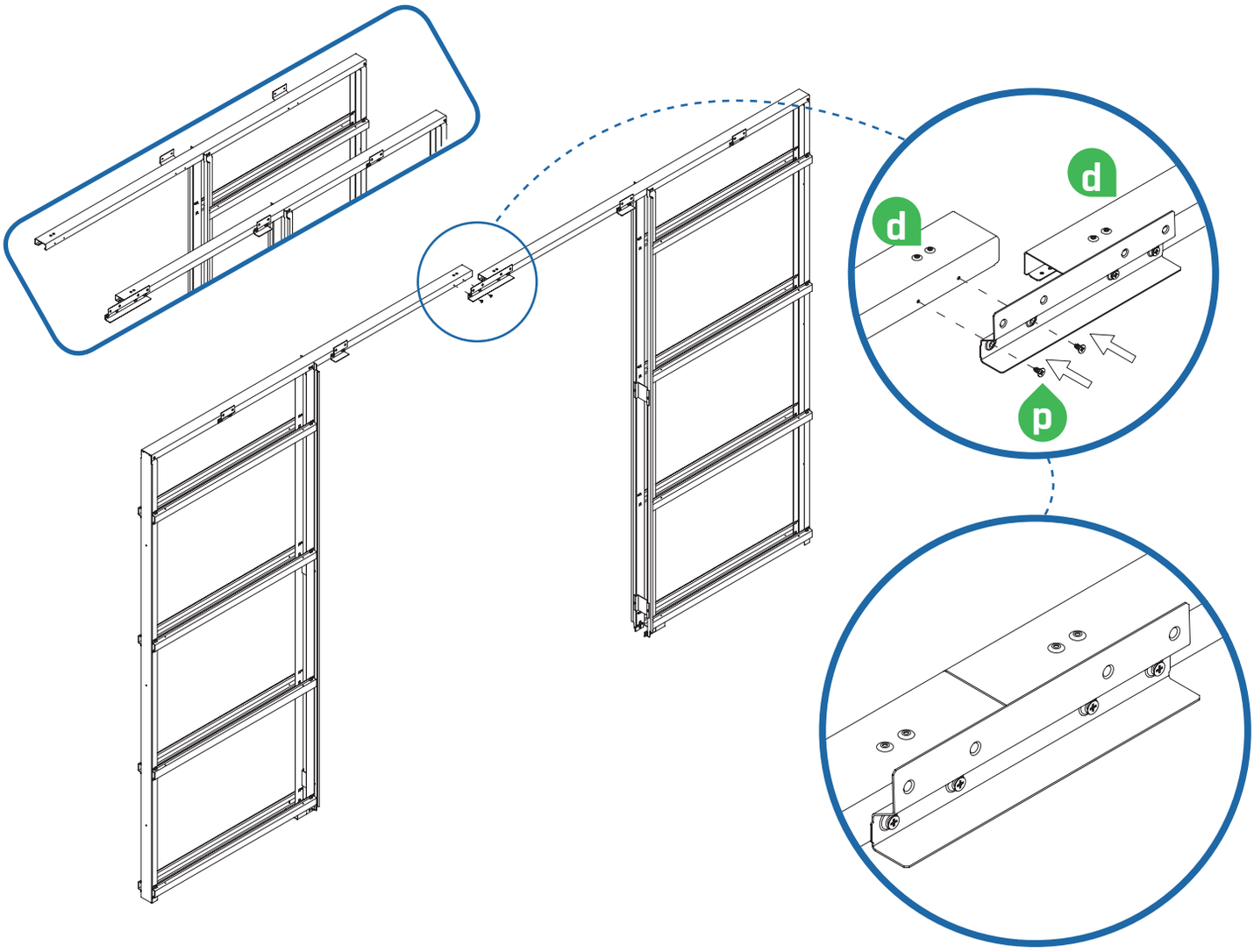

INSTALLING IN STUDWORK

SINGLE DOOR

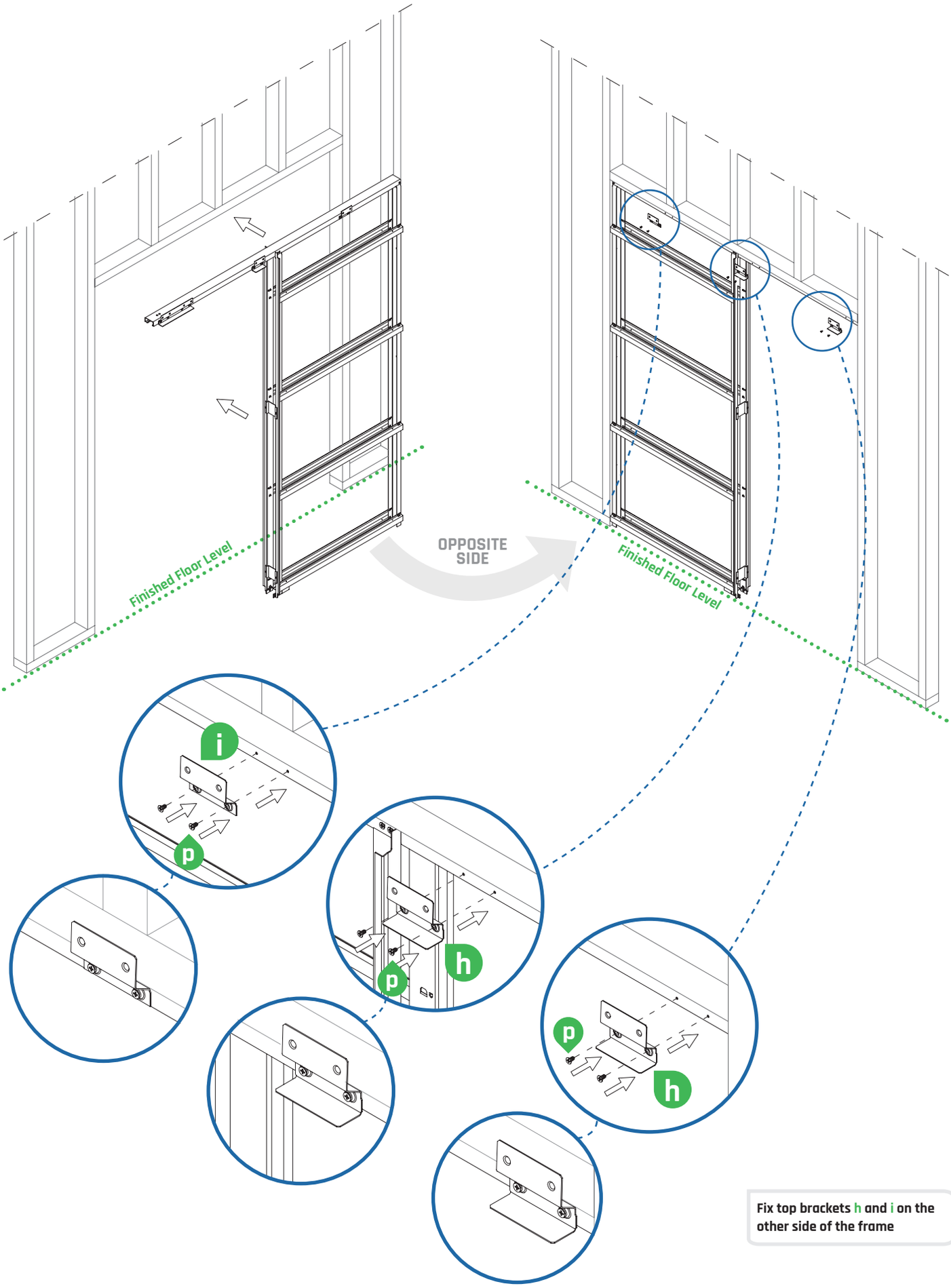

Fix top brackets h and i on the other side of the frame

INSTALLING IN STUDWORK

DOUBLE DOOR

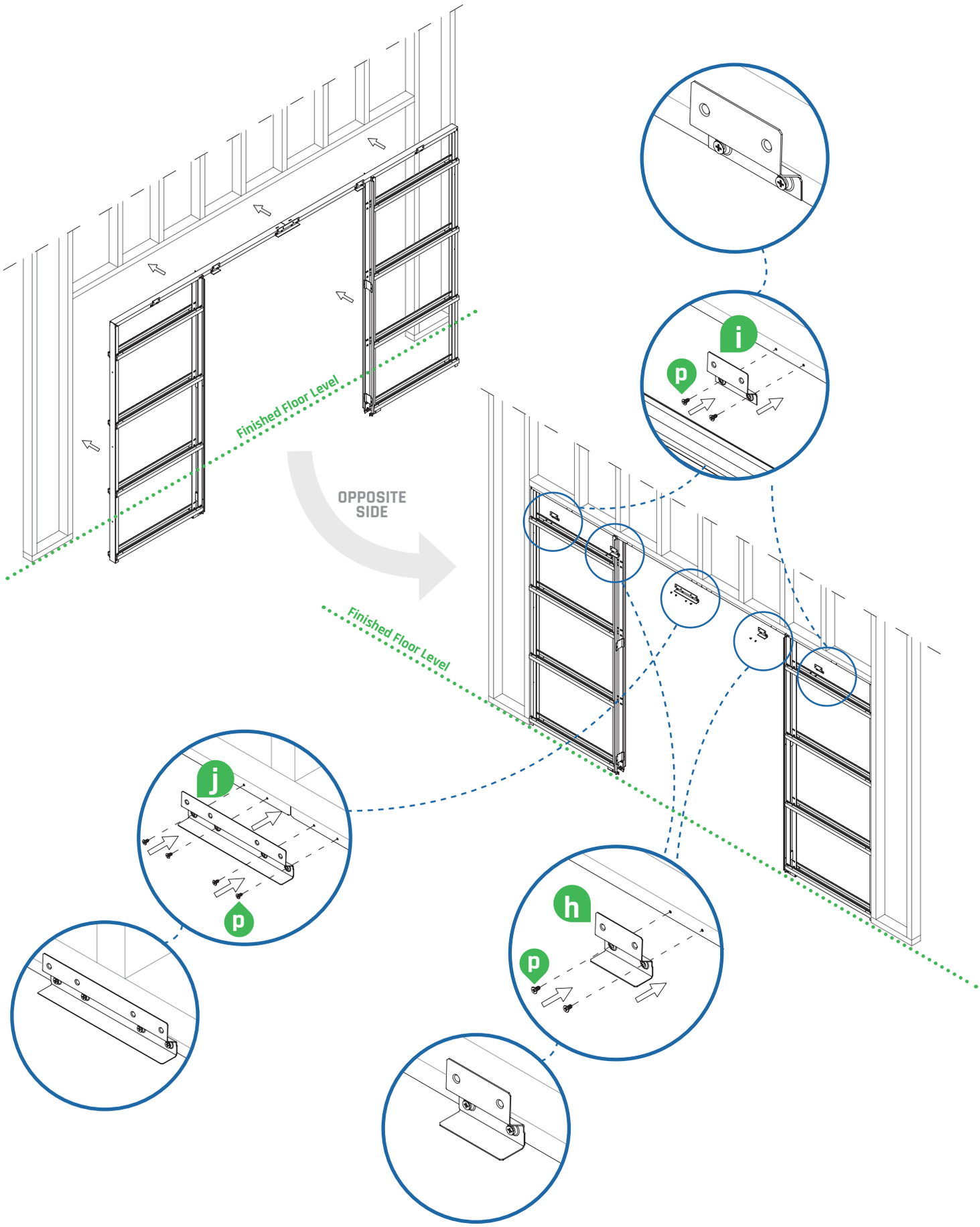

INSTALLING IN STUDWORK

SINGLE DOOR

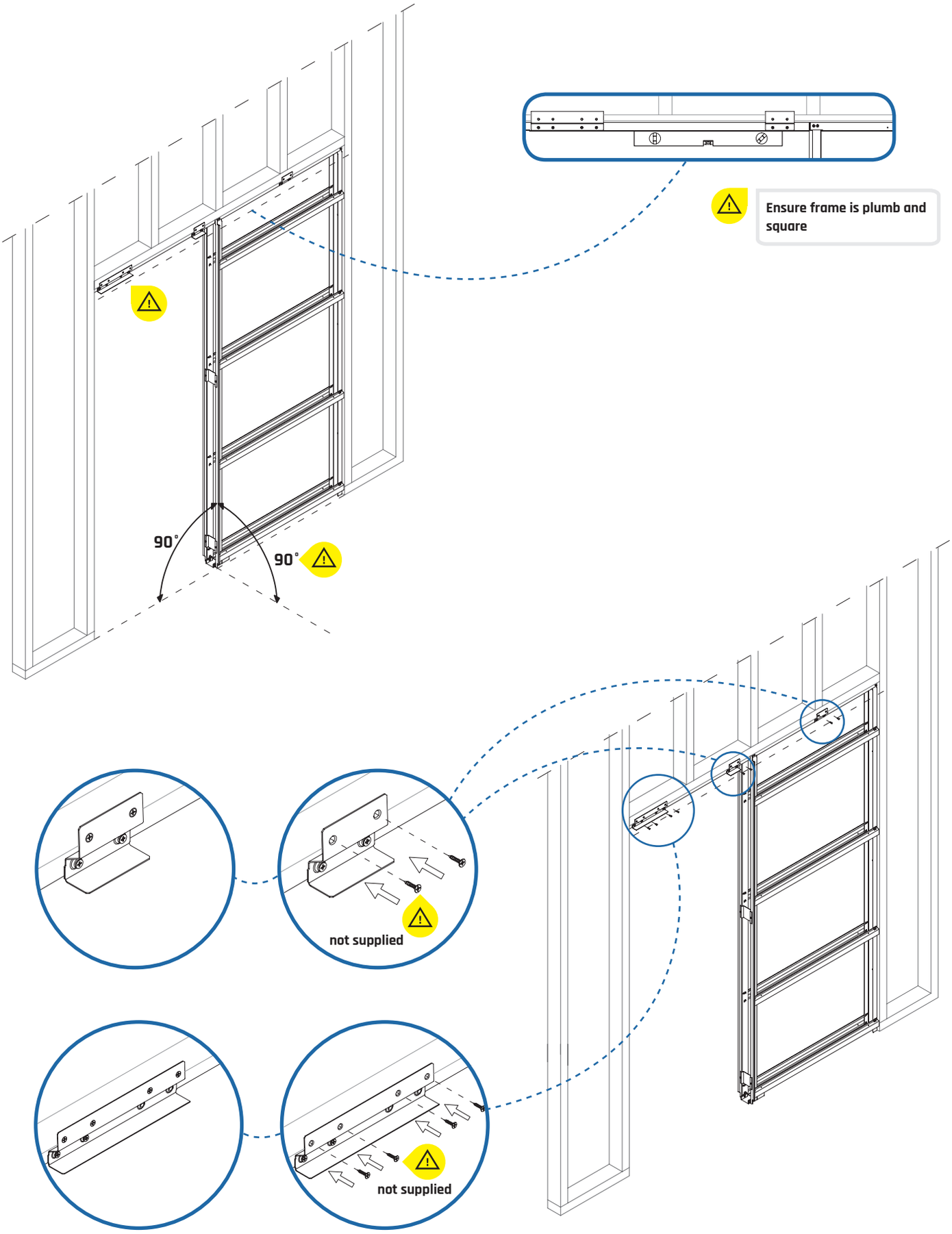

INSTALLING IN STUDWORK

DOUBLE DOOR

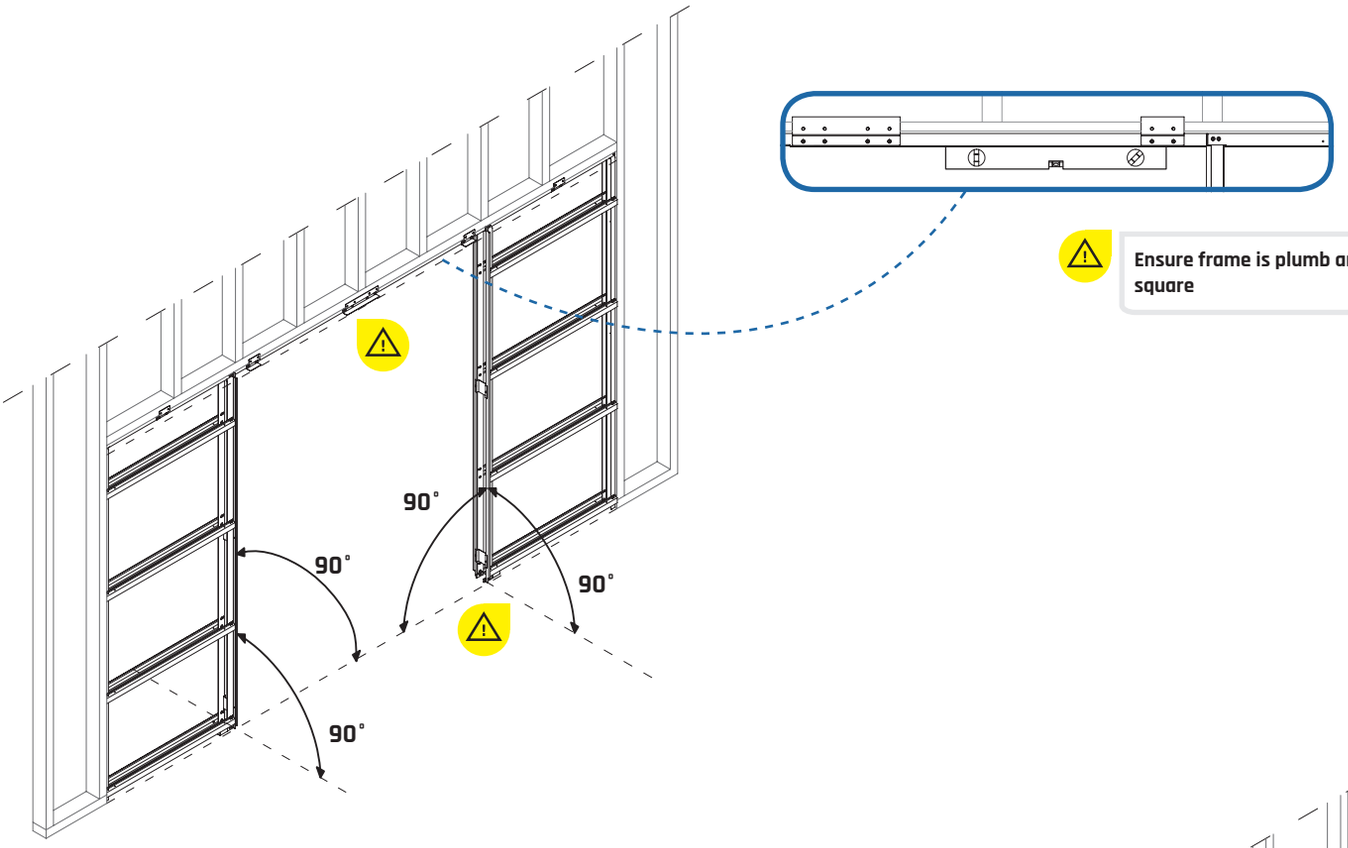

Ensure frame is plumb and square

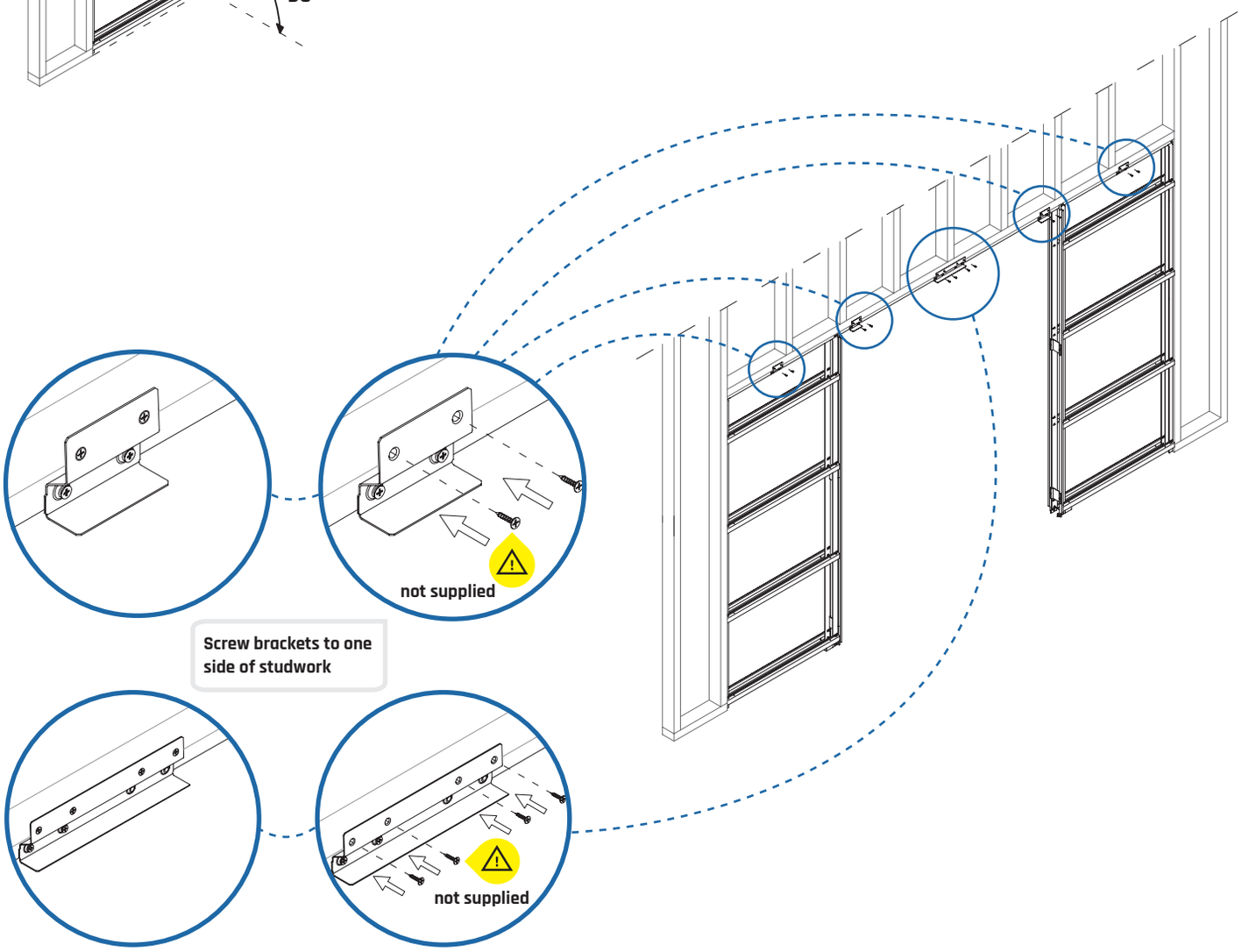

Screw brackets to one side of studwork

INSTALLING IN STUDWORK

SINGLE DOOR

DOUBLE DOOR

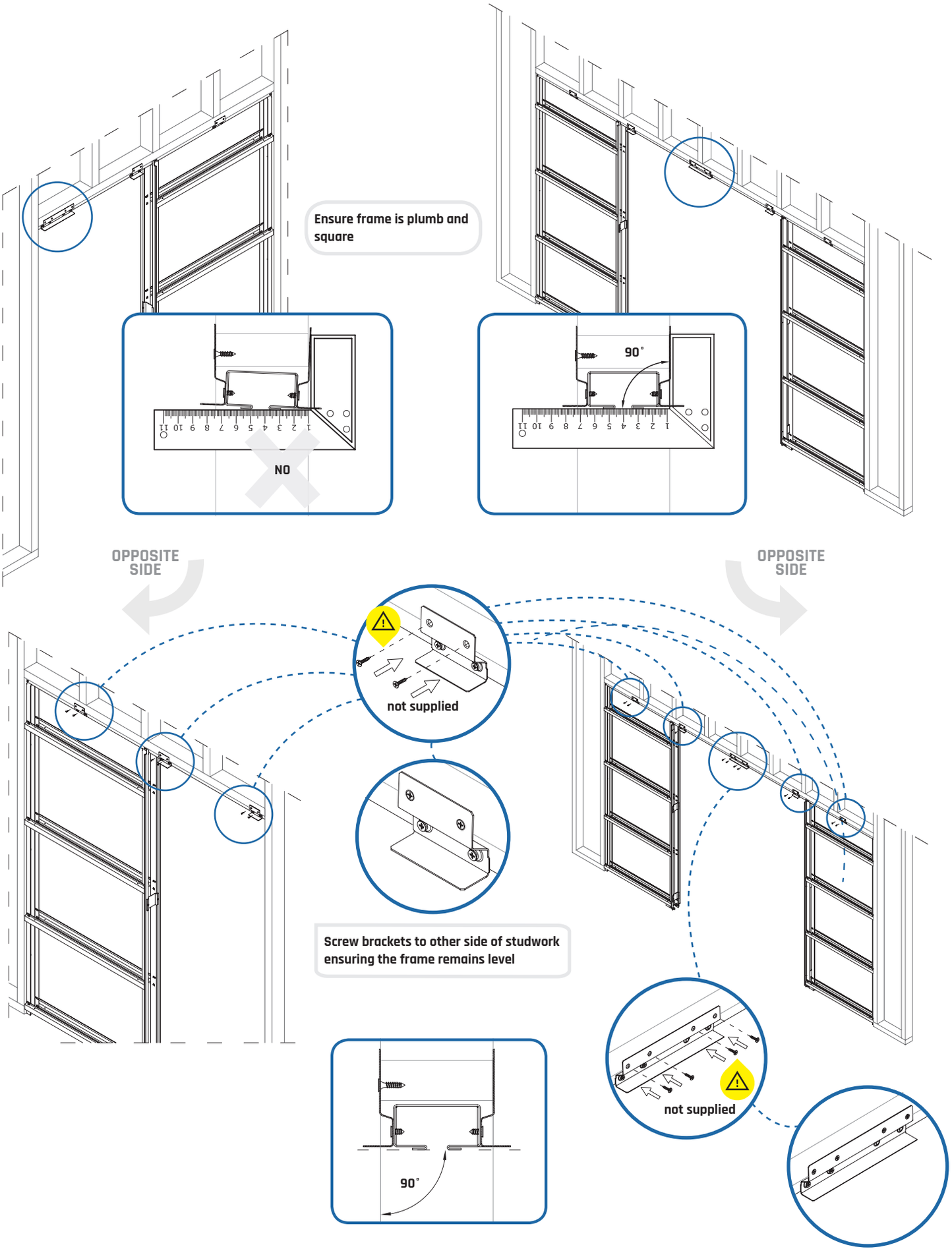

INSTALLING IN STUDWORK

SINGLE DOOR

DOUBLE DOOR

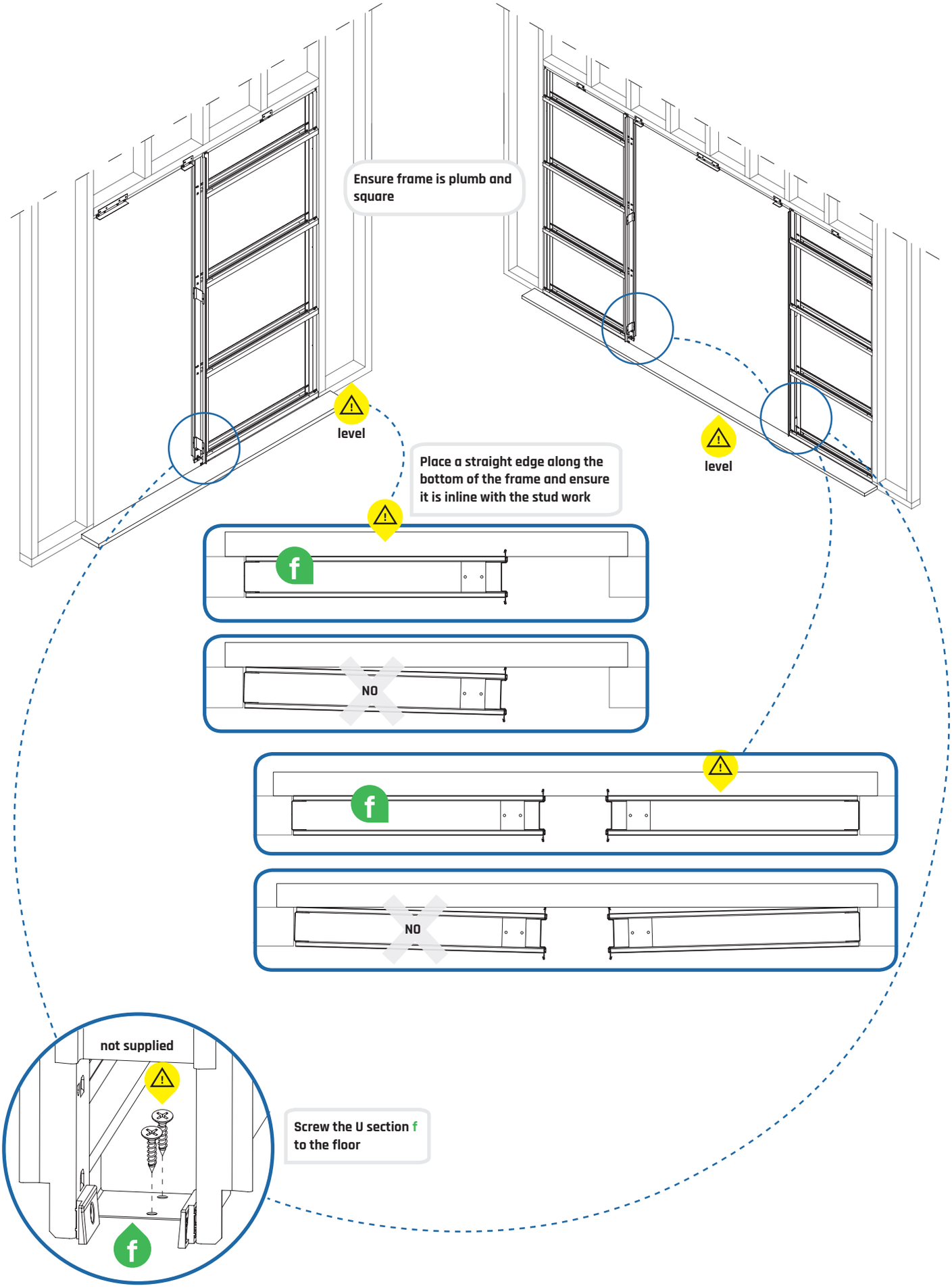

SCREWING THE REAR VERTICAL TO THE STUDWORK

SINGLE DOOR | **DOUBLE DOOR**

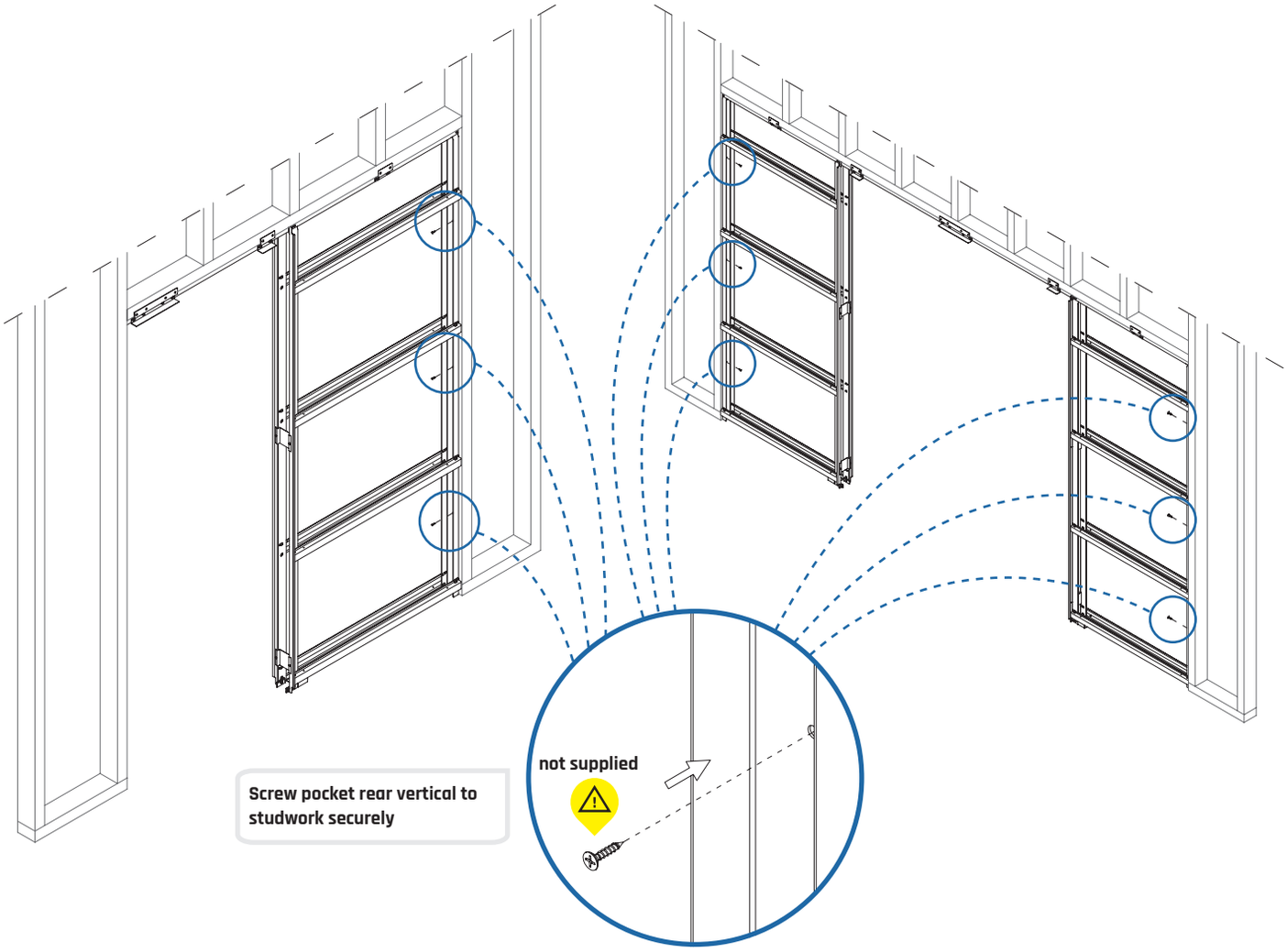

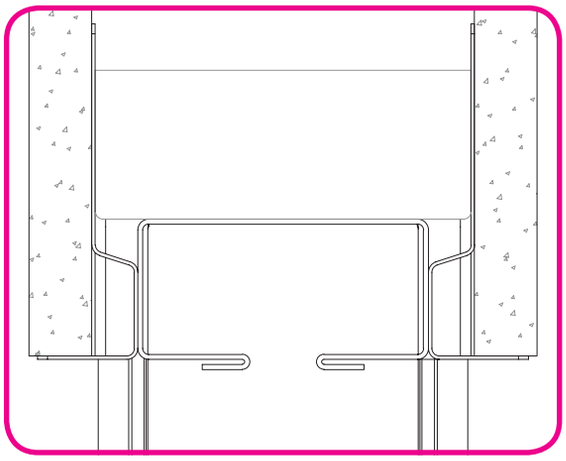

CAREFULLY CLEAN THE TRACK TWICE

FIXING THE PLASTERBOARD

SINGLE DOOR

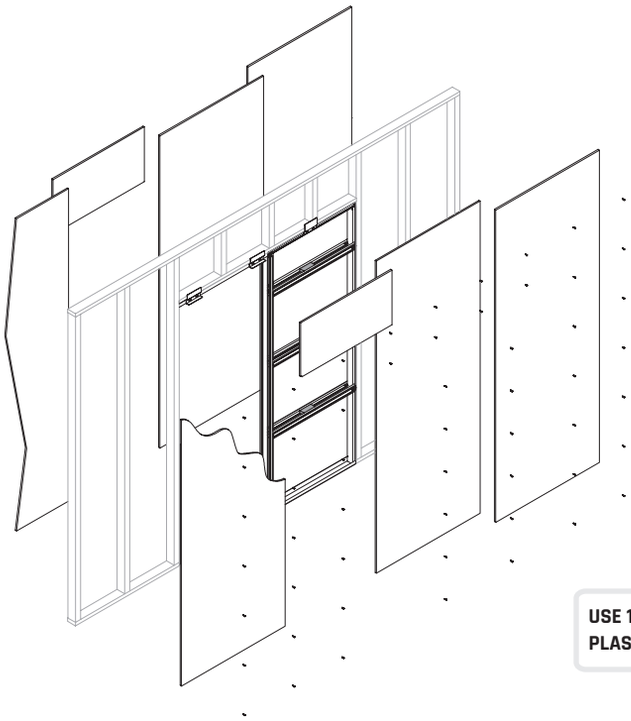

DOUBLE DOOR

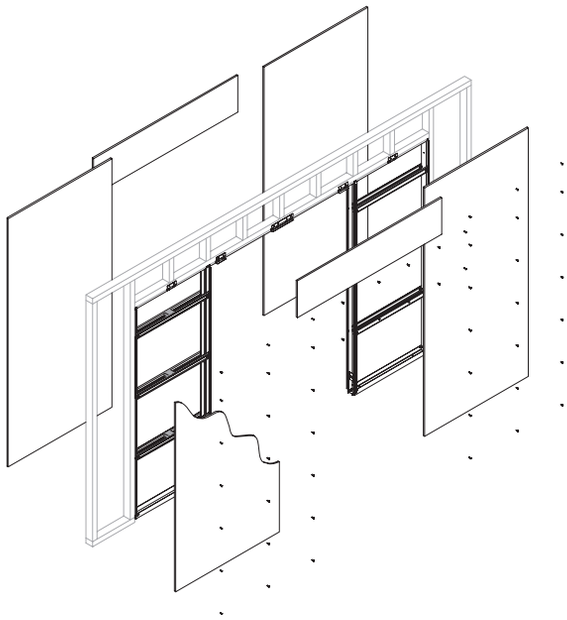

USE 12.5 mm
PLASTERBOARD

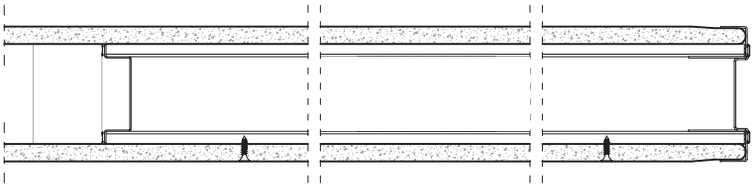

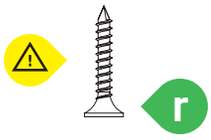

Use supplied
19 mm screws

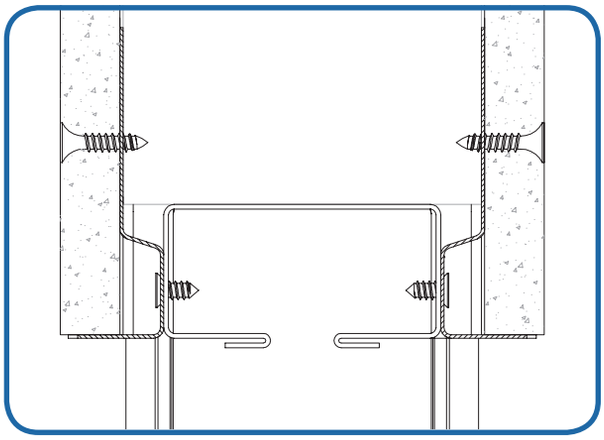

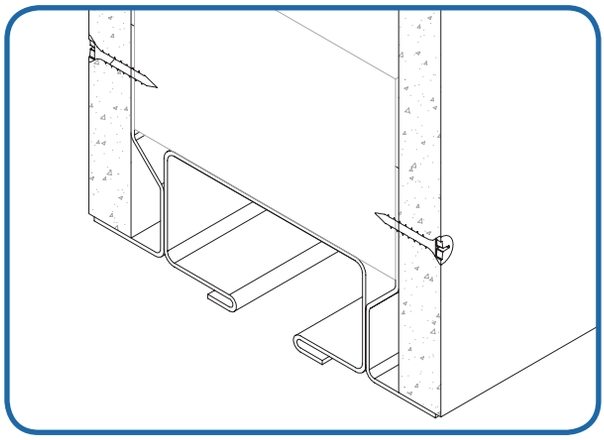

REMOVING BRACKETS

SINGLE DOOR

DOUBLE DOOR

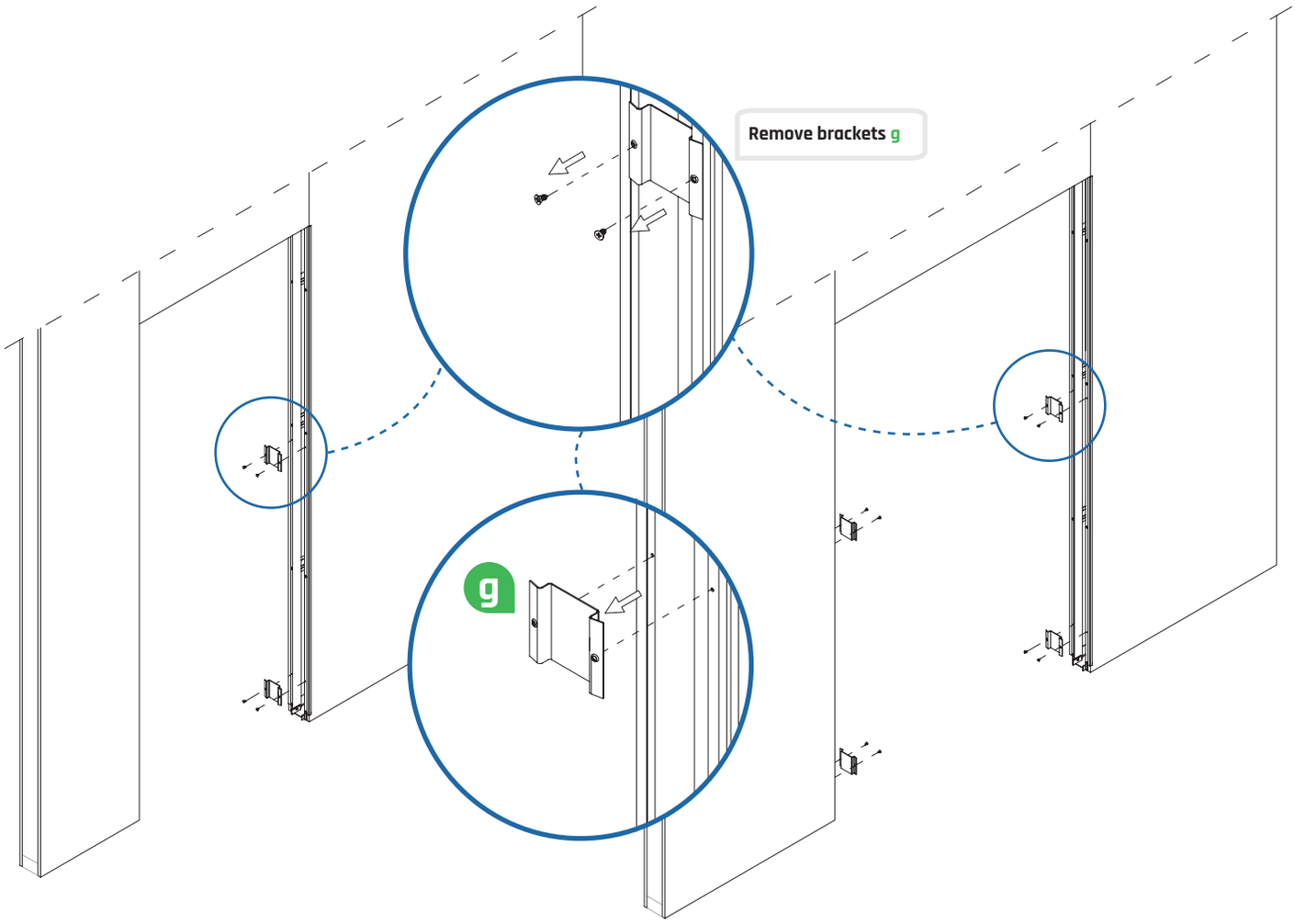

RUNNERS ASSEMBLING

x2 SINGLE DOOR

x4 DOUBLE DOOR

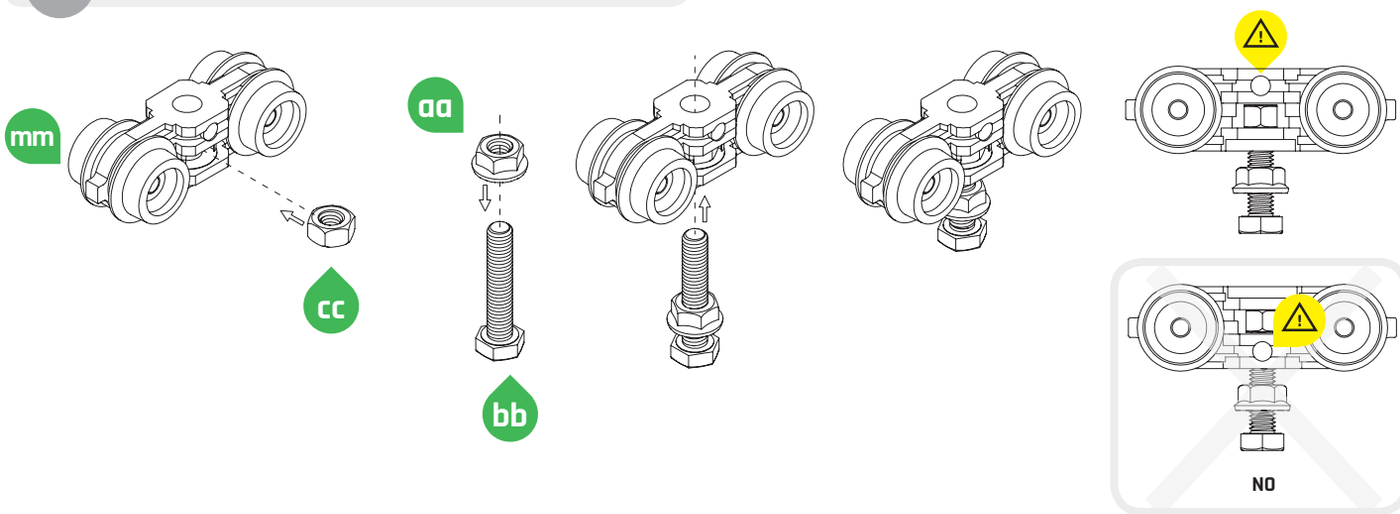

INSERT RUNNERS INTO TRACK

SINGLE DOOR

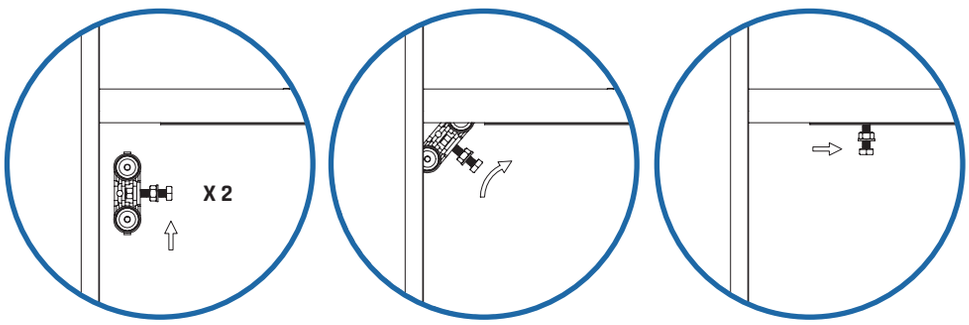

DOUBLE DOOR

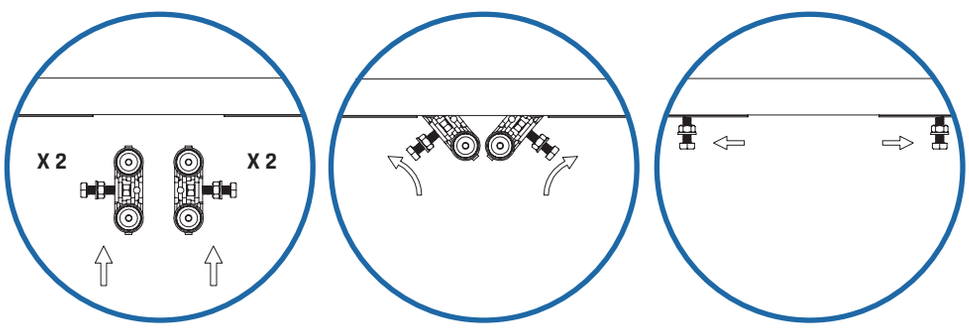

INSTALLING DOOR BRACKETS

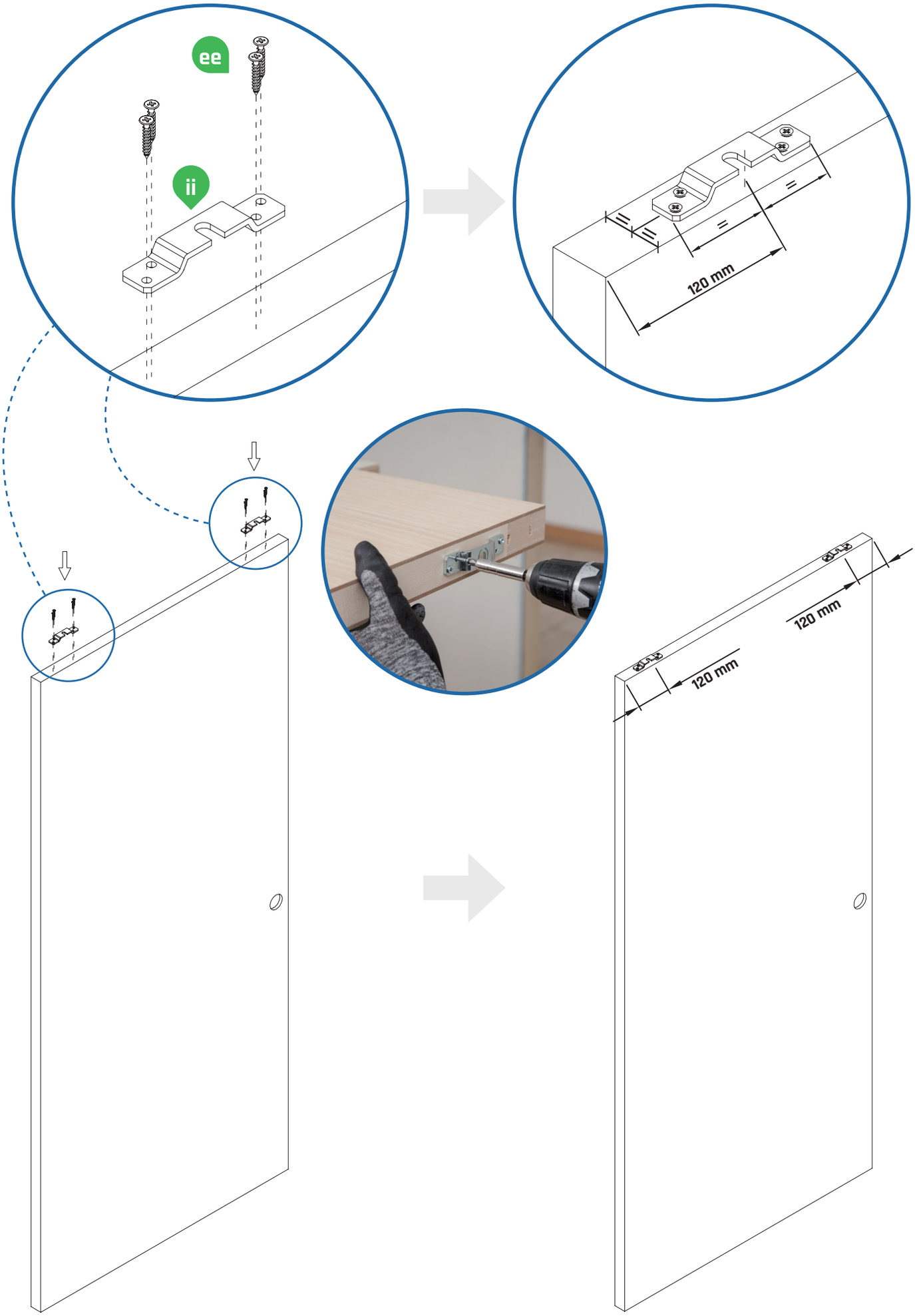

INSTALLING REAR DOOR BUMPER

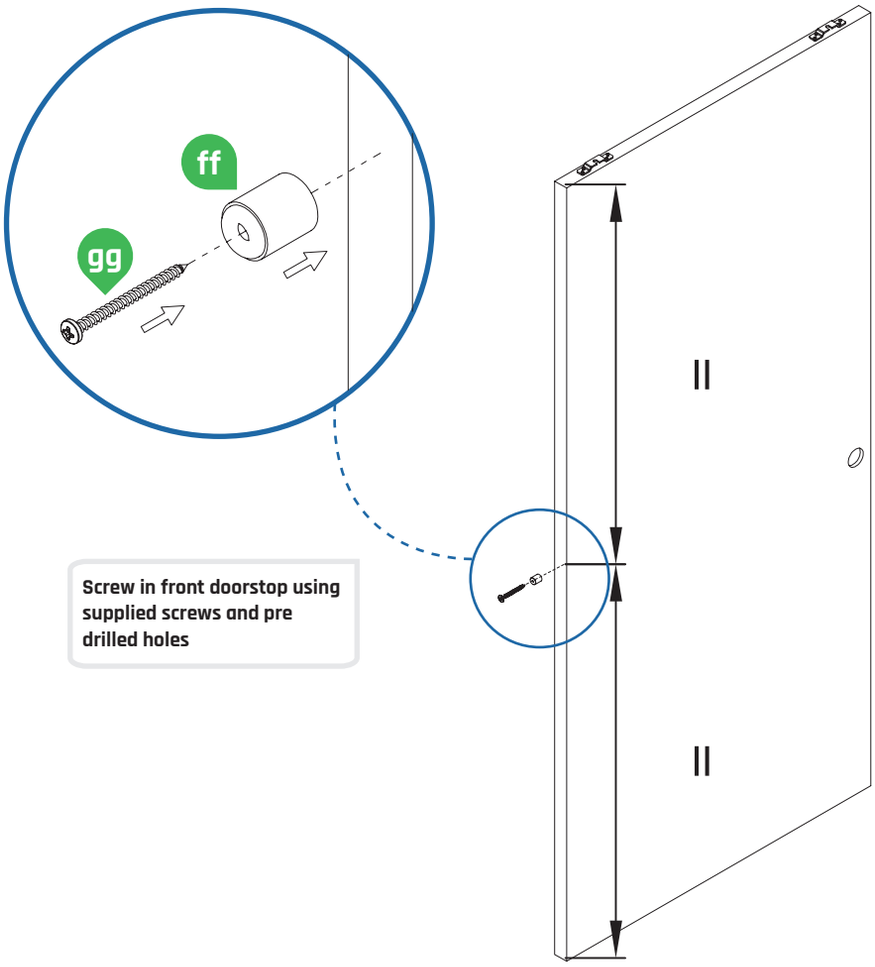

Screw in front doorstop using supplied screws and pre drilled holes

If you wish to adjust the door to protrude from the pocket when fully open, you need to add a distance piece between the rear of the door and the rubber bumper. We recommend this when using flush pulls to eliminate the risk of trapped fingers.

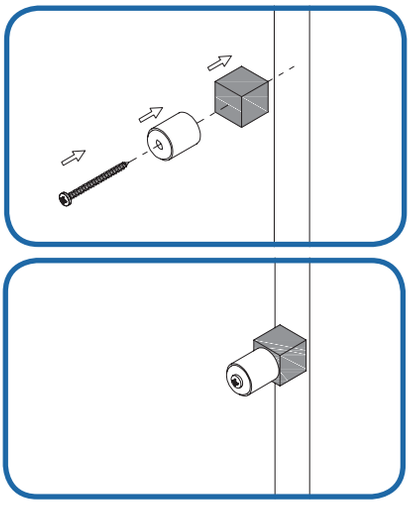

INSTALLING DOOR PANEL

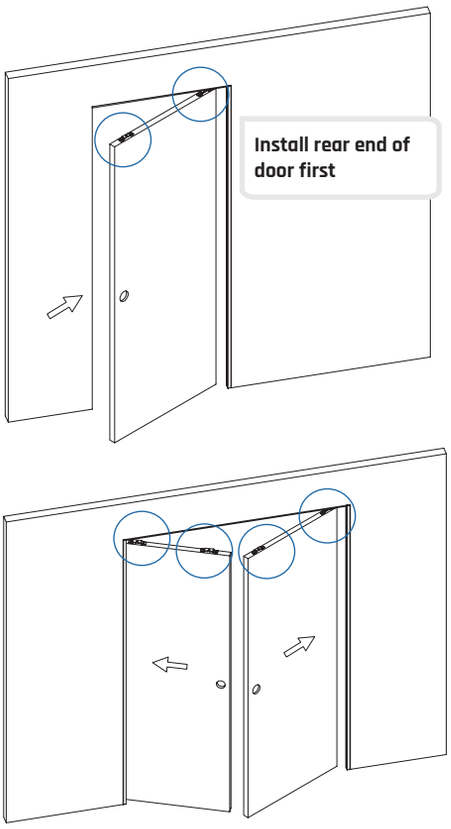

Install rear end of door first

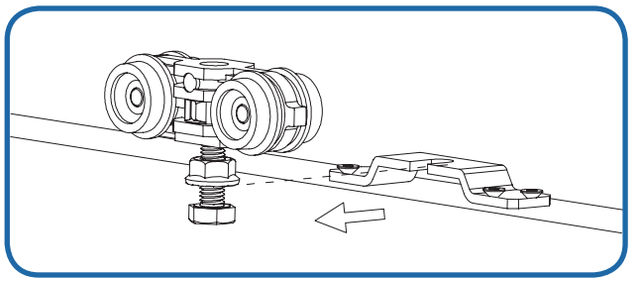

Adjust door height to be 1/4" (7 mm) above the floor and lock into position with by tightening lock nut

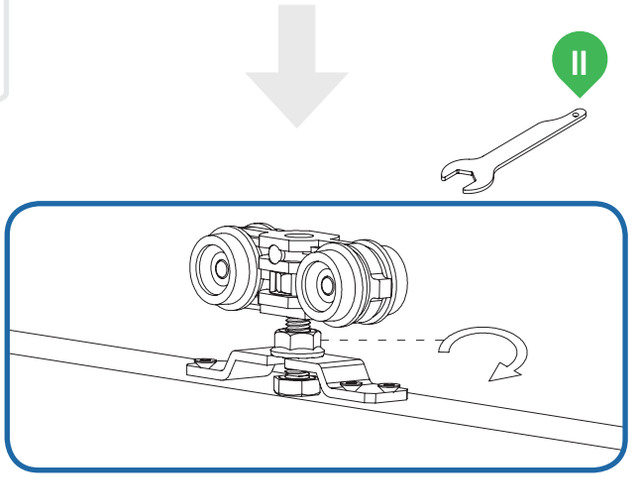

INSTALLING DOOR BRAKE

SINGLE DOOR

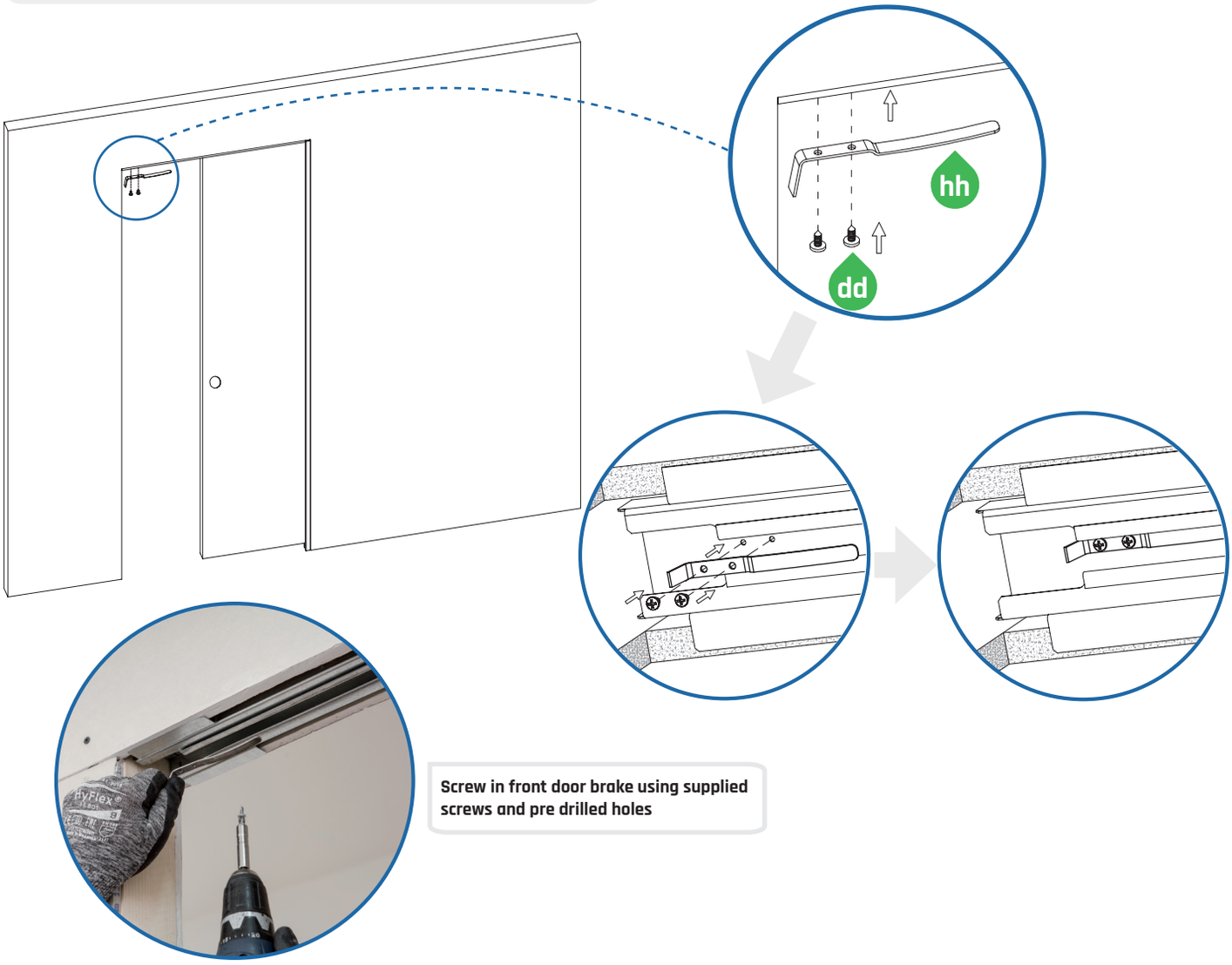

Screw in front door brake using supplied screws and pre drilled holes

DOUBLE DOOR

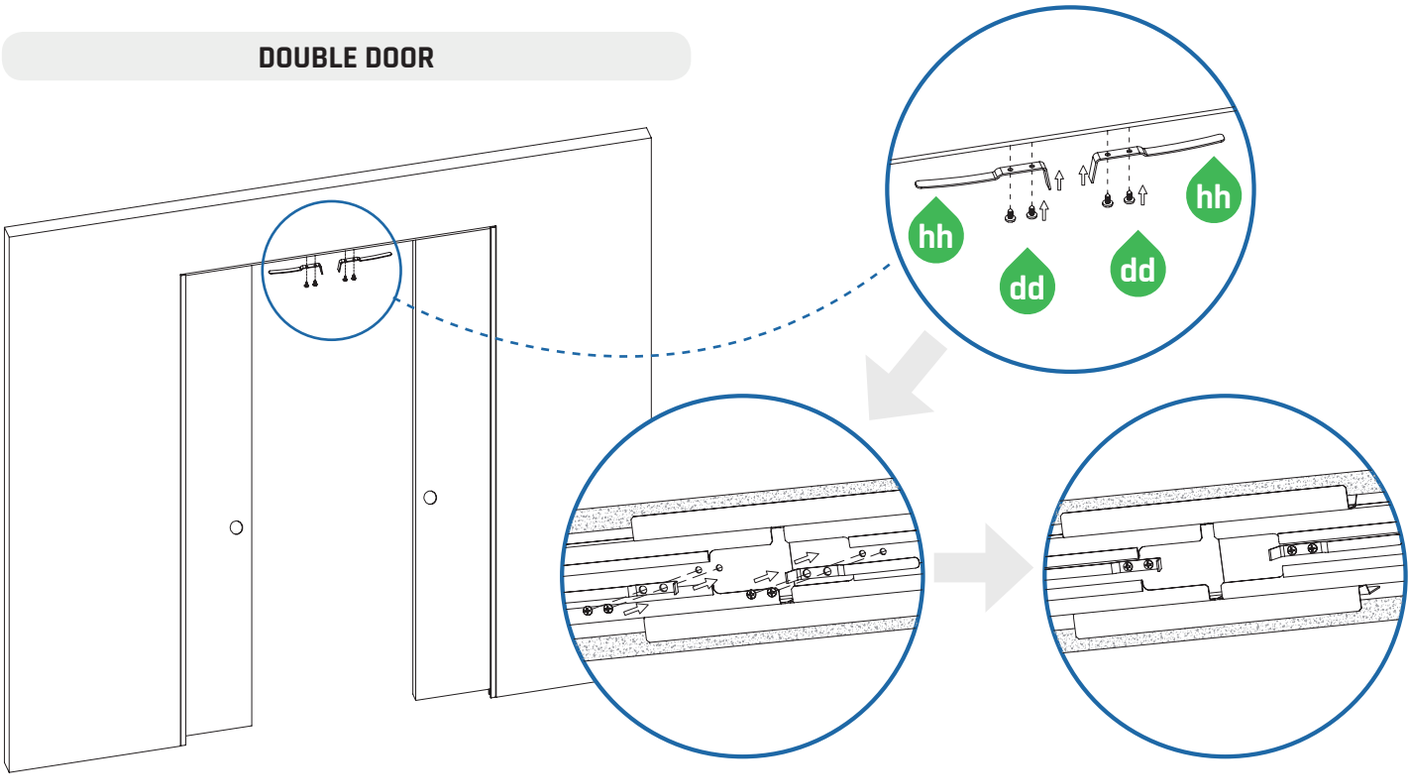

12/2020 0465.00

WANT TO SEE HOW IT'S DONE?

GO TO WWW.ROCKETDOORFRAMES.CO.UK
TO SEE AN INSTALLATION VIDEO

Rocket Door Frames