MOVENTO with BLUMOTION 760H | 766H

Webcode
DQCZ3Y

- Concealed full extension
- Includes integrated, switchable **BLUMOTION S** for silent and effortless closing, and can be combined with **SERVO-DRIVE** or **TIP-ON BLUMOTION**
- Synchronised feather-light glide
- BLUMATIC self closing feature
- Tool-free side, height, and tilt adjustment
- Optional tool-free depth adjustment
- Built-in width and depth tolerance compensation

Space requirement

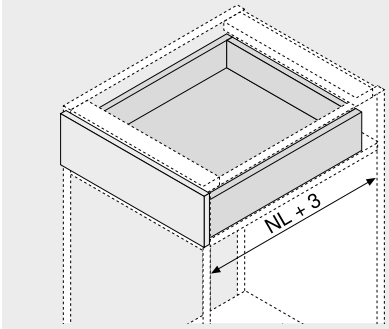

NL Nominal length

Order information

1 Runners left/right

Nominal length NL (mm)	BLUMOTION S Dynamic carrying capacity (kg) 40	60
250 [1]	760H2500S	
270	760H2700S	
300	760H3000S	
320	760H3200S	
350	760H3500S	
380	760H3800S	
400	760H4000S	
420	760H4200S	
450	760H4500S	766H4500S
480	760H4800S	
500	760H5000S	766H5000S
520	760H5200S	766H5200S
550	760H5500S	766H5500S
580		766H5800S
600	760H6000S	766H6000S
650		766H6500S
700		766H7000S
750		766H7500S

[1] Not compatible with TIP-ON BLUMOTION

3 Locking device left/right

Colour	Material	Part no.
Orange	Nylon/steel	T51.7601

Order left/right

Drawer

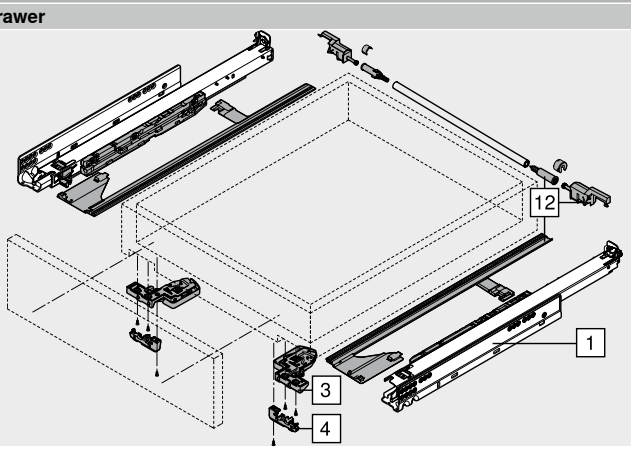

Accessories

4 Depth adjustment left/right

Colour	Material	Part no.
RAL 7037 dust grey	Nylon	298.7600

Only for inset applications
Integrated SERVO-DRIVE bumper
Suitable for T51.7601 locking device

12 Side stabilisation set

Nominal length NL (mm)	Material	Part no.
Up to 400	Nylon	ZS7M400MU
Up to 600	Nylon	ZS7M600MU
Up to 750	Nylon	ZS7M750MU

For cutting to size
Suitable for cabinet width KB 1400 mm